SHEET 1 OF 2

1123-ADS-VD-15M

REV

ITEM NO.	PART NUMBER	QTY.
1	DOOR-DV15M	1
	DOOR-WELDMENT-DV15M	1
	AD-DV15M-DR002-PSEC	1
	AD-DV15M-DR002-PATK	1
	AD-DV15M-DR002-FRM	1
	AD-DV15M-DR002-SP01	1
	AD-DV15M-DR002-WSP1	4
	AD-DV15M-DR002-WSP2	2
	AD-DV15M-DR002-WSP3	2
	B18.3.5M - 6 x 1.0 x 30 Socket FCHS -- 30N	4
	B18.3.5M - 6 x 1.0 x 12 Socket FCHS -- 12N	2
	AUX-LOK-COVER-250	2
	SCHCSCREW 0.164-32x0.3125x0.3125-HX-N	4
	FLAG	1
	AD-DV15M-DR002-SPACER1	1
	AD-DV15M-DR002-SPACER2	1
	AD-DV15M-DR002-SPACER3	1
	AD-DV15M-DR002-SPACER4	1
	AD-DV15M-DR002-SPACER OVERLAY	1
	GLASS-2.375-36X46	1
	GLASS-2.375-36X25.5	1
	AD-DV15M-DR002-WBB1	4
	AD-DV15M-DR002-WBB2	2
	AD-DV15M-DR002-WBB3	2
	SCHCSCREW 0.375-16x1.125x1.125-HX-N	25
	SCHCSCREW 0.375-16x1.5x1.5-HX-N	21
	THUMBTURN2	1
	BEZEL2	1
2	B18.3.1M - 12 x 1.75 x 40 Hex SHCS -- 40NHX	43
3	B18.22M - Plain washer, 12 mm, narrow	43
4	AD_HINGE01	4
	AD_HINGE01-SIDE1	1
	AD_HINGE01-SIDE2	1
	SETSCREW_M5X6_92775A155	2
	AD_HINGE01-PIN	1
5	AD-HB-CAP01	23
6	SHIM_1.5mm_HORSESHOE	41
7	B18.3.5M - 6 x 1.0 x 12 Socket FCHS -- 12N	56
8	B18.3.5M - 6 x 1.0 x 30 Socket FCHS -- 30N	26
9	DOORJAM-DV15M	1
	DOORJAM-01-DV15M	1
	AD-DV15M-DR002-JLL	1
	AD-DV15M-DR002-JLF	1
	AD-DV15M-DR002-JX1	1
	AD-DV15M-DR002-SP02	1
	DOORJAM-02-DV15M	1
	AD-DV15M-DR002-JRL	1
	AD-DV15M-DR002-JRF	1
	AD-DV15M-DR002-JX1	1
	AD-DV15M-DR002-JR	1
	DOORJAM-03-DV15M	1
	AD-DV15M-DR002-JX2	1
	AD-DV15M-DR002-JTF	1
	AD-DV15M-DR002-JTL	1
	PEMKO-1710	1
	STRINGER PLATE-15M	1
10	AD-DV15M-DR002-BB1	2
11	AD-DV15M-DR002-BB2	1
12	AD-DV15M-DR002-A001	1
13	AD-DV15M-DR002-A002	1
14	AD-DV15M-DR002-A003	1
15	ADS-15M-DR002-TWT	1
	AD-DV15M-DR002-T011	1
	AD-DV15M-DR002-JX4	1
16	ADS-15M-DR002-TWL	1
	AD-DV15M-DR002-T012	1
	AD-DV15M-DR002-JX3	1
17	ADS-15M-DR002-TWR	1
	AD-DV15M-DR002-T013	1
	AD-DV15M-DR002-JX3	1

REFERENCE ONLY
NOT FOR PRODUCTION

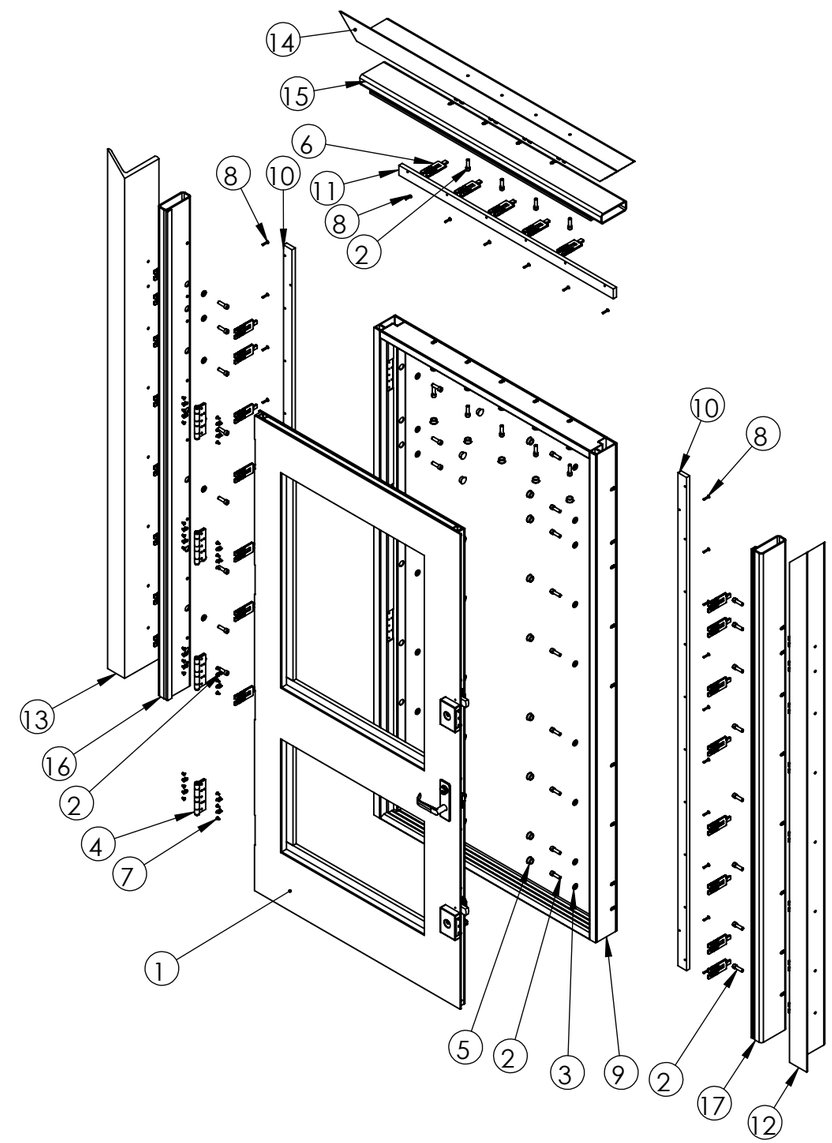

PRINTED: Thursday, February 28, 2008 brandon

DRAWN: BLM
DATE: 2/28/2008

DIMENSIONS ARE IN INCHES UNLESS STATED OTHERWISE
HOLES: +.003 / -.002
ANGULAR: ±1°
2 dec. plcs. .03
3 dec. plcs. .020
4 dec. plcs. .0100

DOS: 1123
MODEL: ADS-VD-15M
DOS MODEL:
GDT-15M-ADSI-01
DESCRIPTION:
48"X96" DBL VIS DOOR

MATERIAL
CLASS
FINISH

APSG, LLC
2420 McKinney Parkway
Lillington, NC 27546

PROPRIETARY AND CONFIDENTIAL
THIS MATERIAL IS CONFIDENTIAL AND SOLELY THE PROPERTY OF APSG, LLC, AND MAY NOT BE REPRODUCED, PUBLISHED, AND/OR DISCLOSED WITHOUT WRITTEN AUTHORIZATION FROM APSG, LLC.

DO NOT SCALE DRAWING
SCALE:1:25
WEIGHT:
CUST. REV. 0
DRW. REV.
SHEET 1 OF 2

1123-ADS-VD-15M
DRW NAME

ZONE	REV.	DESCRIPTION	DATE	APPROVED

REVISIONS

PROJECT MANAGER | DATE | PROJECT ENGINEER | DATE | PRODUCTION MANAGER | DATE | MANUFACTURING ENGINEER | DATE | QUALITY ASSURANCE | DATE

1123-ADS-VD-15M

Z:\ACTIONGROUP - PERSONNEL FILES\Brandon\DOORS\1123-ADS-VD-15M\